Task-Based Activities

QUILL Learning Network

Task Title: Material Handling, Hoisting and Moving Heavy Objects

OALCF Cover Sheet –Learner Copy

Learner Name: _____

Date Started: _____

Date Completed: _____

Successful Completion: Yes ☐ No ☐

Goal Path: Employment ☐ Apprenticeship ☐

Secondary School ☐ Post Secondary ☐ Independence ☐

Task Description:

Read document to learn safe Material Handling practices for hoisting and moving heavy objects to prevent injuries in the workplace.

Main Competency/Task Group/Level Indicator:

- Find and Use Information/Interpret documents/A2.2

Materials Required:

- Pen and paper and/or digital device

Learner Information

Knowing how to safely hoist and move heavy objects is an important part of preventing injuries and staying safe when working as a Material Handler. Scan the Manual Materials Handling (MMH) - Hoisting and Moving Heavy Objects.

CCOHS CCHST
Canadian Centre for Occupational Health and Safety · Centre canadien d'hygiène et de sécurité au travail

Manual Materials Handling (MMH)

MMH - Hoisting and Moving Heavy Objects

On this page

What equipment can be used to help with heavy objects?

What equipment can be used to help with heavy objects?

Selecting the right equipment for the task minimizes handling.

Use a cart, trolley or platform.

- Consider carts with hand brakes for more control on inclines, or powered hand carts for stairs.

Use carts designed for specific purposes (e.g. holding cylinders) as needed.

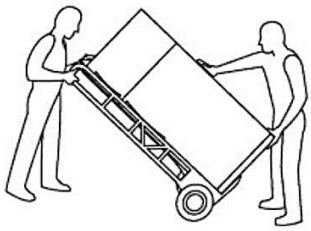

- Use a pulley to eliminate manual lifting.
- Select multiple pulleys according to the weight of the object to be hoisted.
- Mount pulley on movable frame to lift and move heavy objects.

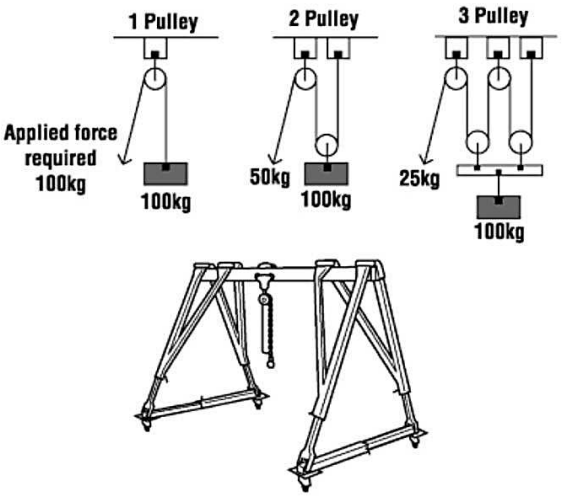

- Use a portable hoist or floor crane to lift and move heavy objects.
- Use lifting magnets in combination with hoists where appropriate.

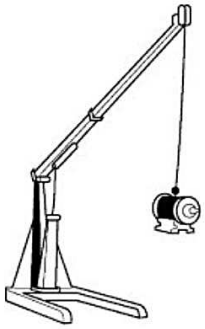

- Use lift tables to lift objects or to level work.
- Select the lift table according to the weight of the anticipated load.

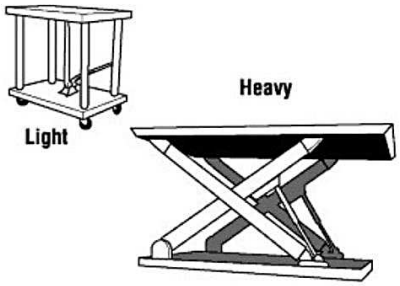

- Use a portable conveyor to move materials.

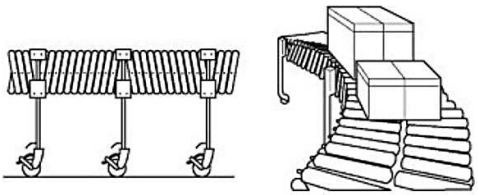

- Use a combination of lift tables and rollers to move materials horizontally and vertically.

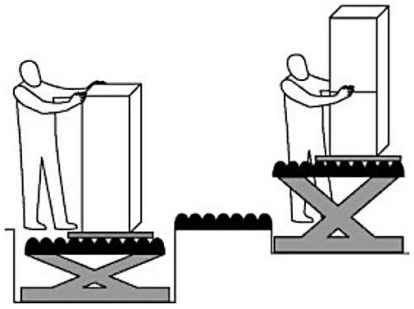

Fact sheet last revised: 2019-06-04

Disclaimer

Although every effort is made to ensure the accuracy, currency and completeness of the information, CCOHS does not guarantee, warrant, represent or undertake that the information provided is correct, accurate or current. CCOHS is not liable for any loss, claim, or demand arising directly or indirectly from any use or reliance upon the information.

Link to document online:
https://www.ccohs.ca/oshanswers/ergonomics/mmh/hoisting.html

Work Sheet

Task 1: Why is it important to select the right equipment to move heavy objects?

Answer:

Task 2: What can you use instead of manual lifting?

Answer:

Task 3: How much applied force is needed when using 3 pulleys to lift 100kg?

Answer:

Task 4: When should you use a combination of lift tables and rollers?

Answer:

Task 5: How do you select which lift table to use?

Answer:

Task 6: Which type of cart gives you more control on inclines?

Answer: